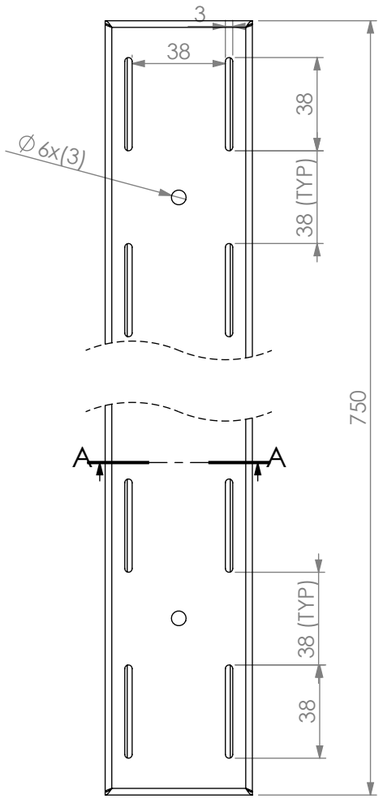

3 OFF

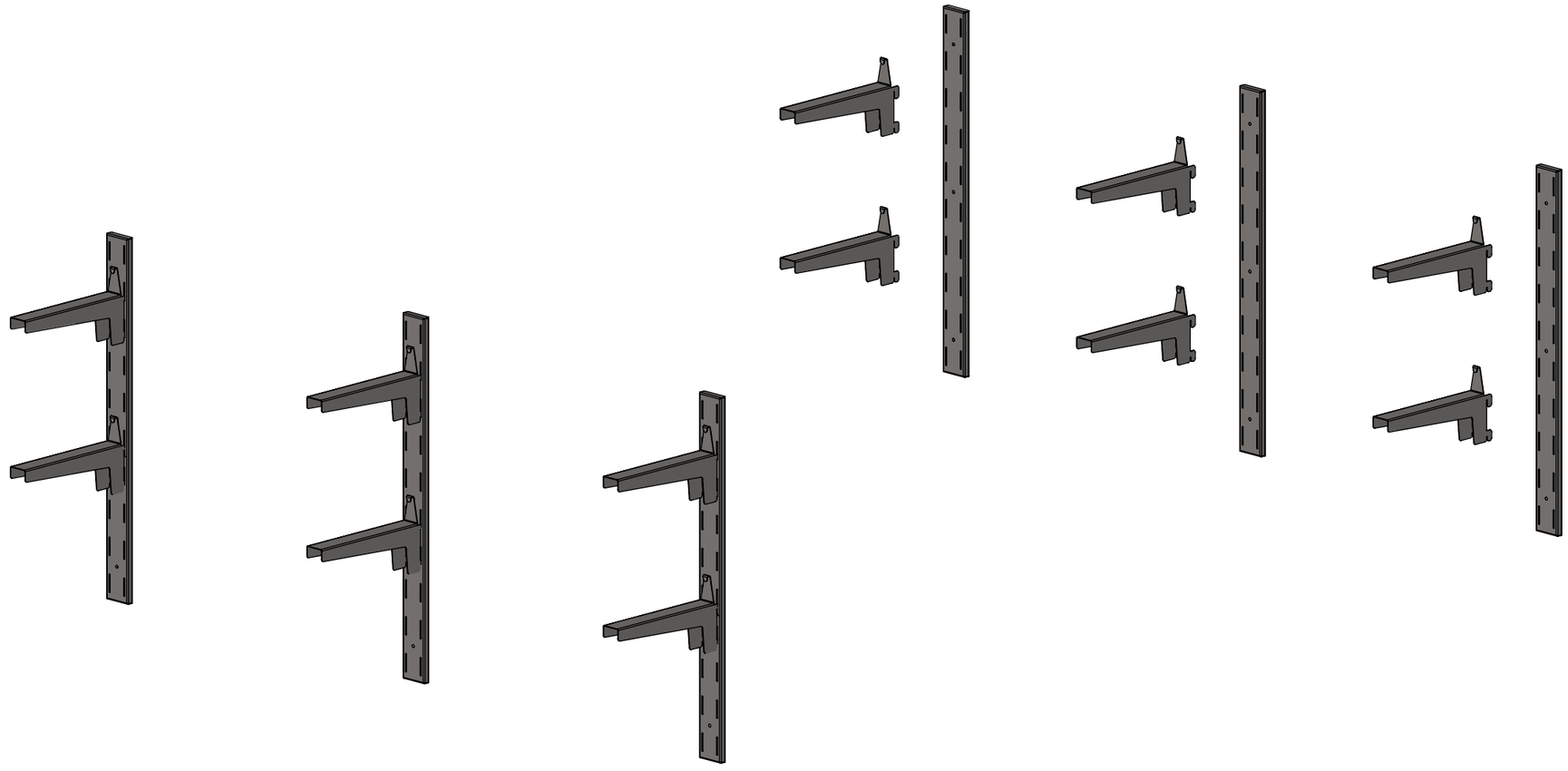

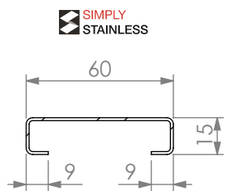

SECTION A-A

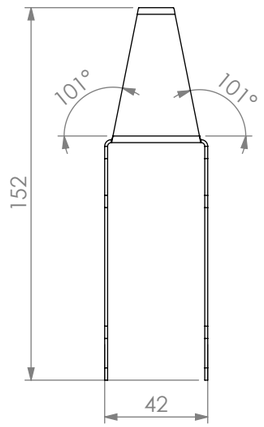

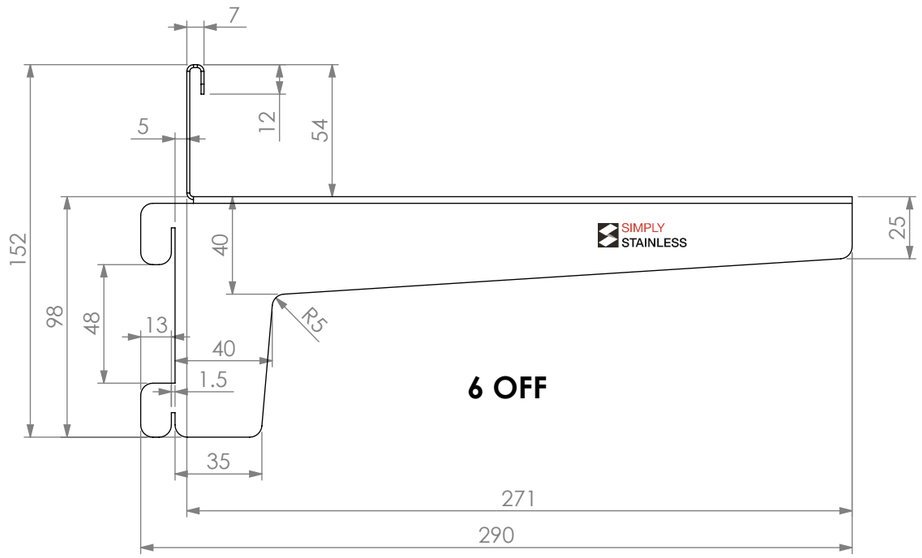

6 OFF

TWO TIER ADJUSTABLE WALL SHELF KIT B
TO SUIT WALL SHELF SIZE 1800mm, 2100mm, 2400mm

SIMPLY STAINLESS
Modular Sinks, Tables & Shelving

COPYRIGHT © 2023
This drawing is the property of CI GROUP PTY LTD. Tradings as SIMPLY STAINLESS and It may not be copied, reproduced or modified in whole or in part without prior written permission of CI GROUP PTY LTD. SIMPLY STAINLESS reserves the right to change specification and design without notice.

KIT B
TWO TIER ADJUSTABLE WALL SHELF KIT

SIZE: A3 SCALE : NTS

CONSTRUCTION NOTES :

1. MADE FROM 1.2mm STAINLESS STEEL.

100% RECYCLABLE STAINLESS STEEL

100% RECYCLED 100% RECYCLABLE