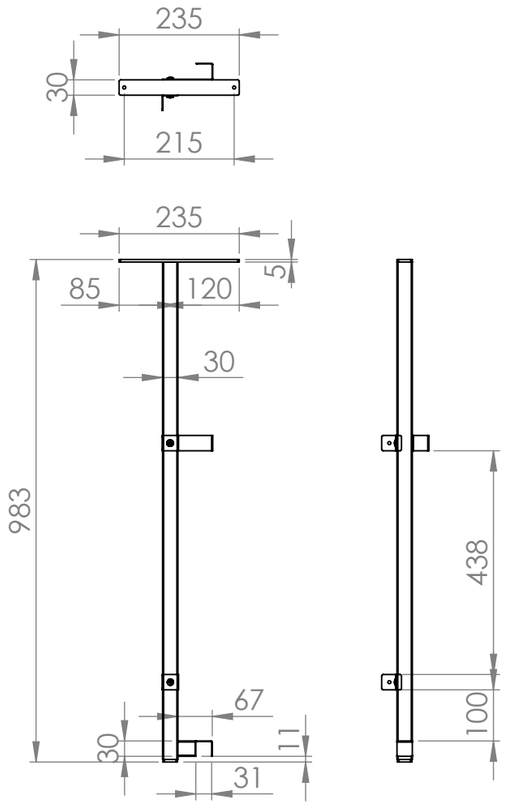

FRAME
SCALE:1:12@A3

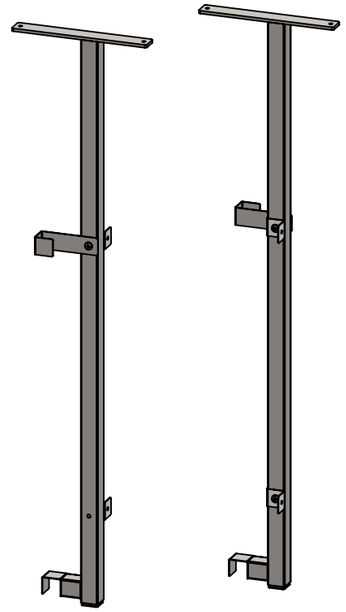

LH RH

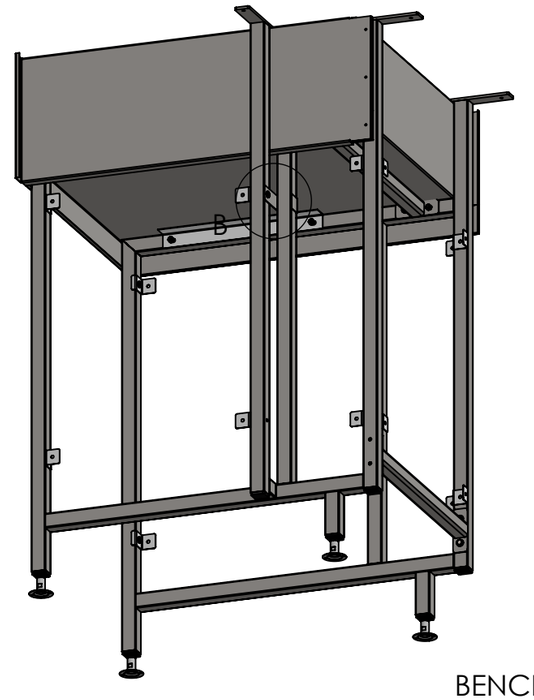

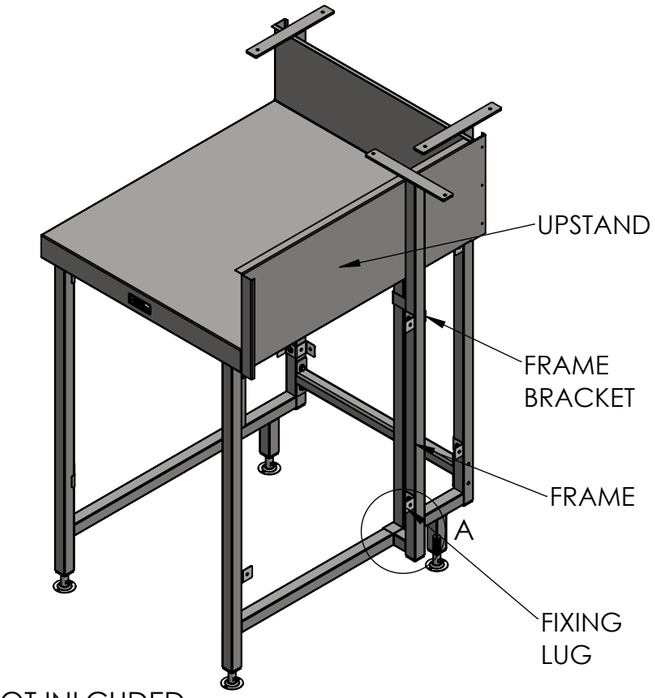

BENCH NOT INLCUDED,
FOR ILLUSTRATION ONLY.

DETAIL B

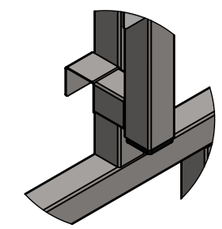

DETAIL A

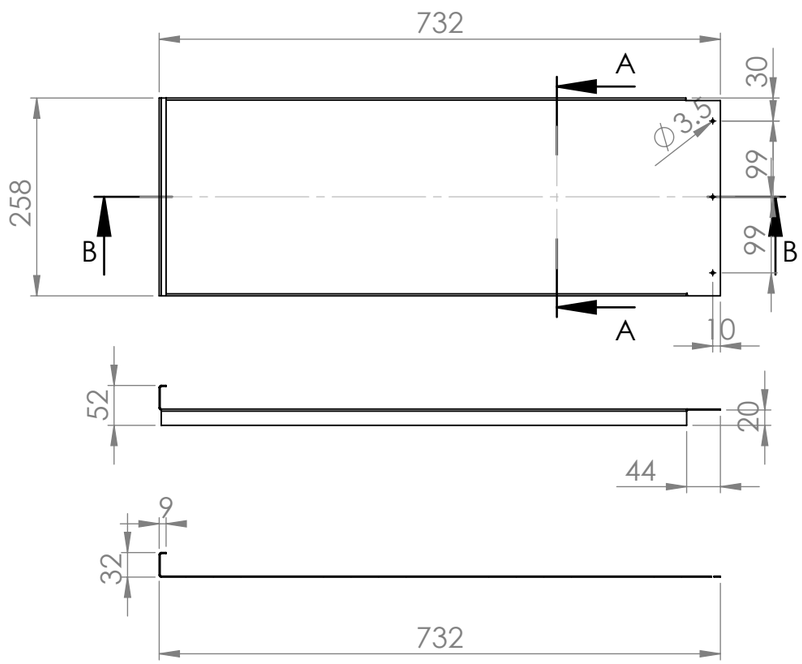

SECTION B-B

UPSTAND
SCALE:1:8@A3

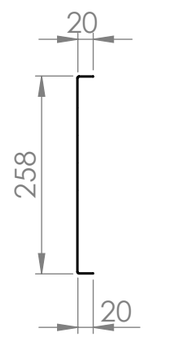

SECTION A-A

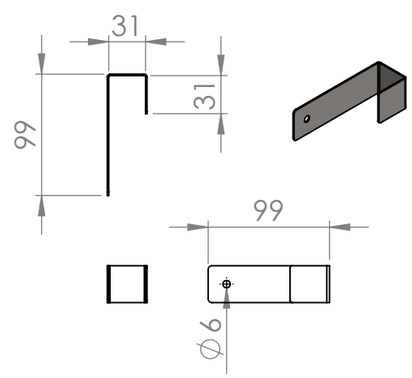

FRAME BRACKET
SCALE:1:5@A3

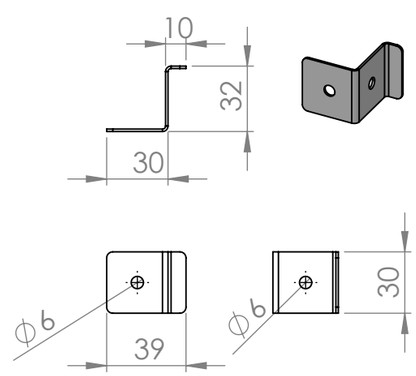

FIXING LUGS
SCALE:1:3@A3

SBM END PANEL KIT, 700 SERIES

SIMPLY STAINLESS
Modular Bar Solutions

COPYRIGHT © 2023
This drawing is the property of CI GROUP PTY LTD. Tradings as SIMPLY BARS and It may not be copied, reproduced or modified in whole or in part without prior written permission of CI GROUP PTY LTD. SIMPLY BARS reserves the right to change specification and design without notice.

SBM-CS-6-0950
Standard Product

SIZE: A3 SCALE: VARIES

CONSTRUCTION NOTES :

1. FRAME MADE FROM 30x30mm STAINLESS STEEL SQ TUBE.
2. UPSTAND MADE FROM 304 GRADE,1.2mm STAINLESS STEEL.
3. FIXING LUGS MADE FROM 1.2mm STAINLESS STEEL.

100% RECYCLABLE STAINLESS STEEL
100% RECYCLED 100% RECYCLABLE